Random Noise Generator

Abstract

A random noise generator produces signals with unpredictable amplitude and frequency. These signals are widely used in testing electronic systems, communication circuits, and signal analysis. In this project, a noise generator circuit was designed and analyzed using LT spice, followed by implementation as a 2-layer PCB using KiCad.

Introduction

Noise is an inherent part of electronic systems and can originate from various physical phenomena. Instead of treating noise only as an unwanted signal, it can also be generated intentionally for useful applications such as system testing and audio processing.

This project focuses on understanding different types of noise and designing a circuit capable of generating such signals. The workflow includes simulation using LTspice and hardware design using KiCad.

Types of Noise

Thermal Noise (White Noise):
Generated due to random motion of electrons in conductors. It has a uniform frequency distribution.

Shot Noise:
Occurs due to discrete charge flow in electronic devices, resulting in random fluctuations.

Flicker Noise (1/f Noise):
Dominant at low frequencies and decreases as frequency increases.

Objective

- To design a random noise generator circuit
- To simulate and analyze noise signals using LT spice
- To implement the circuit as a 2-layer PCB using KiCad

REFERENCE R. L. Boylestad and L. Nashelsky, *Electronic Devices and Circuit Theory*, 11th ed., Pearson, 2013.

LT Spice Simulation

Overview

The circuit was designed and simulated in LT spice to observe the behavior of random noise signals. Simulation helps verify the circuit performance before hardware implementation.

Circuit Design

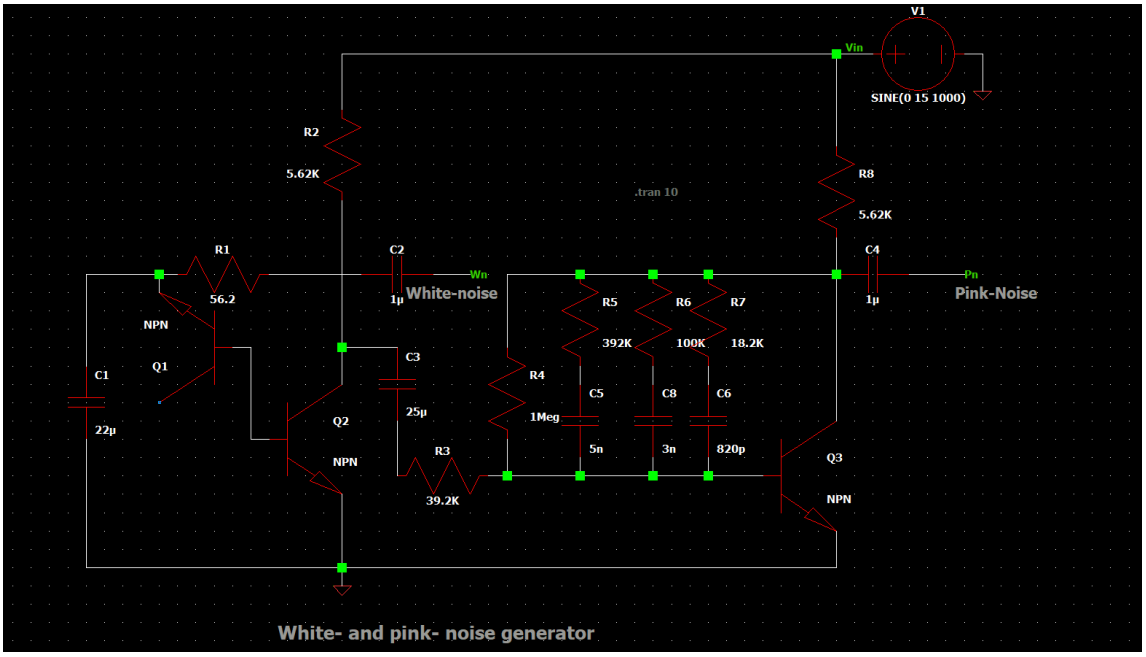

Output Waveform

White-noise:

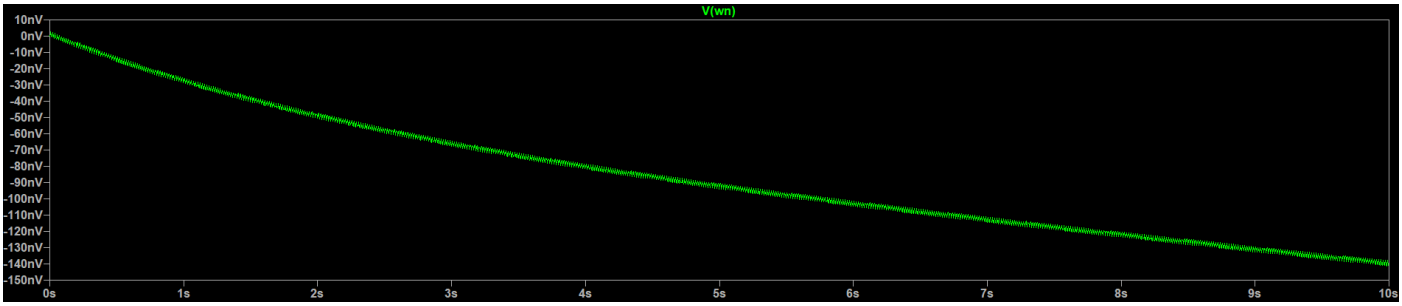

Pink-noise:

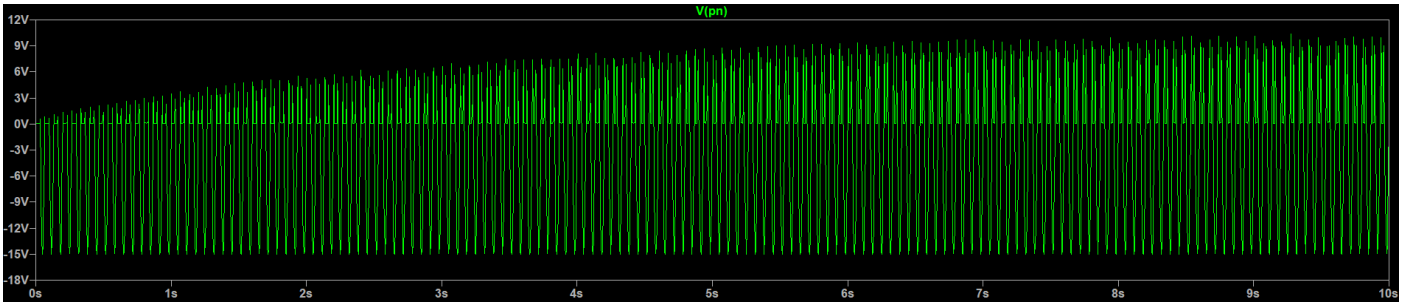

PCB Design using KiCad

Overview

After successful simulation, the circuit was implemented on a 2-layer PCB using KiCad. This step converts the simulated design into a physical layout suitable for fabrication.

Schematic Design

The schematic was recreated in KiCad based on the LTspice circuit. All components were properly connected and verified before proceeding to layout design.

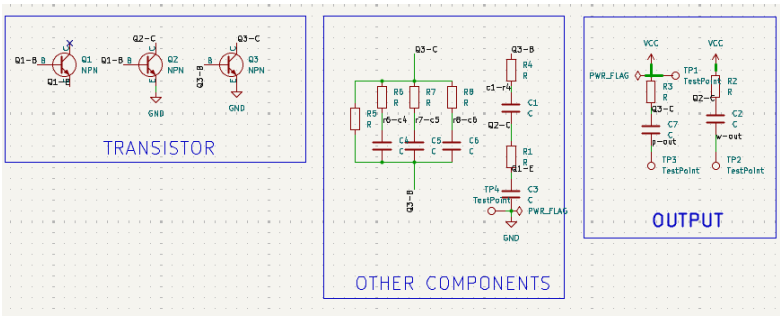

PCB Layout

The PCB was designed as a 2-layer board with proper component placement and routing. Tracks were arranged to ensure smooth signal flow and reduce unwanted interference. A simple and compact layout was achieved.

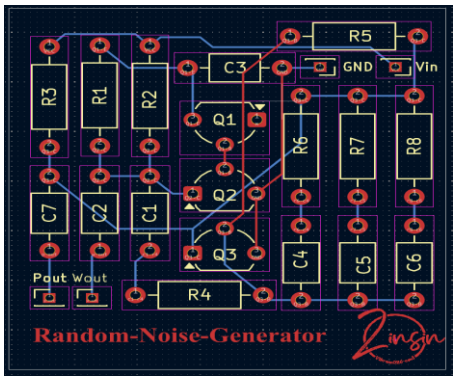

3D View
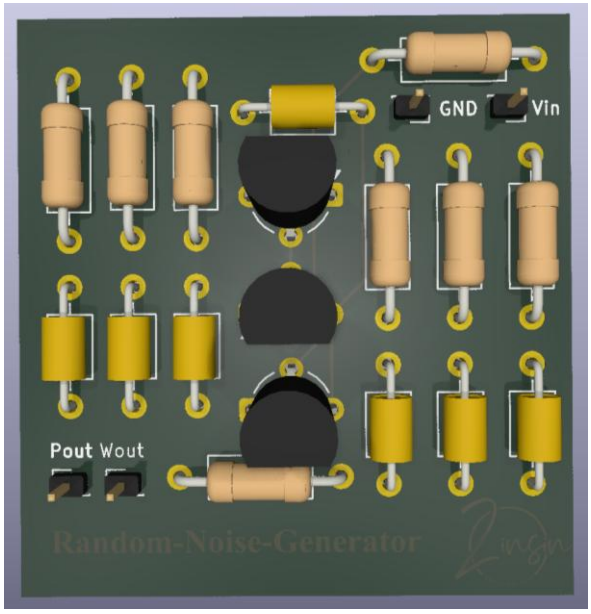
The 3D model shows the final physical appearance of the board. It helps in verifying component placement and overall structure before fabrication.